education

Department:
Education
PROVINCE OF KWAZULU-NATAL

NATIONAL SENIOR CERTIFICATE

GRADE 10

MATHEMATICS

COMMON TEST

SEPTEMBER 2019

MARKS: 75

TIME: 1½ hours

This question paper consists of 8 pages.

Copyright reserved

INSTRUCTIONS AND INFORMATION

Read the following instructions carefully before answering the questions.

1. This question paper consists of 6 questions.
2. Answer ALL the questions.
3. Clearly show ALL calculations, diagrams, graphs, etc. which you have used in determining your answers.
4. Answers only will NOT necessarily be awarded full marks.
5. You may use an approved scientific calculator (non-programmable and non-graphical), unless stated otherwise.
6. If necessary, round off answers correct to TWO decimal places, unless stated otherwise.
7. Diagrams are NOT necessarily drawn to scale.
8. Write neatly and legibly.

Copyright Reserved

QUESTION 1

1.1 Mrs. Reyem wants to buy herself a new laptop. After completing her monthly budget she realises that she does not have the money to buy a new laptop right now.

Mrs. Reyem decides to buy a laptop on a hire purchase agreement from a computer store that advertises the following special:

Cash Price: **R 4 999**
OR
Hire purchase: 12% Deposit and 24 equal monthly payments to the value of **R 6 598,68**

1.1.1 Calculate how much Mrs. Reyem would pay for the deposit. (2)

1.1.2 Calculate how much Mrs. Reyem will have to pay as her monthly instalment. (1)

1.1.3 Calculate the total amount that Mrs. Reyem will pay for her new laptop on the hire purchase agreement. (2)

1.1.4 Calculate the yearly interest rate charged on the laptop hire purchase agreement, if Mrs. Reyem had decided to pay a deposit of R600. (3)

1.2 The average price of a litre of petrol in the UK is now approximately £1.30. In the United States a litre of petrol costs about $0,85 while in South Africa we pay R16,57 per litre.

Country	Currency	Exchange Rate
United States (USA)	Dollars ($)	$1 = R 14,75
United Kingdom (UK)	Pounds (£)	£1 = R 18,77

Use the exchange rate table to calculate in which country the cost per litre of petrol would be CHEAPEST. (3)

1.3 Amelia decides to invest some money at a compound interest rate of 14% p.a. How much money (to the nearest rand) should be invested if she wants to receive a final amount of R 85 000 in eight years time? (3)

1.4 The population of a city in South Africa increased by 5,25% for the year 2017.

At the beginning of 2018 the population of the city was 2 560 000.

Assuming that the population will continue to increase at a constant rate of 5,25% each year, estimate the population of the city at the beginning of 2020.

Give your answer correct to the nearest whole number. (3)

[17]

Copyright Reserved

QUESTION 2

2.1 A bag contains red, green, blue and yellow balls. There are 5 of each colour, numbered from 1 to 5. The balls are placed in a bag and one is chosen at random.

2.1.1 Determine the probability that the ball selected is pink. (1)

2.1.2 Determine the probability that the ball selected is blue. (1)

2.1.3 Determine the probability that the ball selected is numbered 3. (1)

2.2 The two events A and B are such that: $P(A) = 0,85$ and $P(B) = k$.

Determine:

2.2.1 P(A and B), if A and B are **mutually exclusive** events. (1)

2.2.2 P(A and B), if A and B are **non-mutually exclusive, exhaustive** events and $k = 0,5$. (4)

2.3 Match the Venn diagrams in column A with the expressions in column B which best represents the shaded area. In your answer book write down the question number and the correct expression from column B only. e.g. 2.3.7) P(A or B)

COLUMN A	COLUMN B
2.3.1 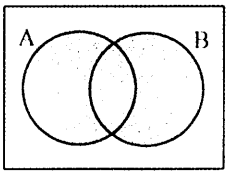	P(A')
2.3.2 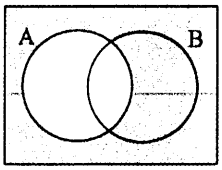	P(A and B)
2.3.3 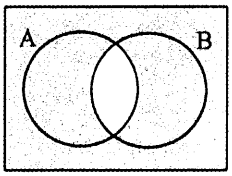	P(A or B)
2.3.4 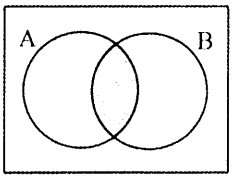	P(A and B)'

(4)

2.4 Last year, there were 38 pupils in a grade 10 class. Of these pupils:

- 22 studied French (F)
- 8 studied German (G)
- 7 studied both French and German.

2.4.1 Represent the information above in a Venn diagram. (3)

2.4.2 How many learners from the class studied neither French nor German? (1)

2.4.3 Determine the probability that a learner selected at random from this class:

(a) studied German ONLY (1)

(b) did NOT study French. (1)

[18]

QUESTION 3

Mr. Lembede asked each student in his Grade 10 Mathematics class how many minutes of homework they do each day. He drew this box and whisker diagram for the information he obtained.

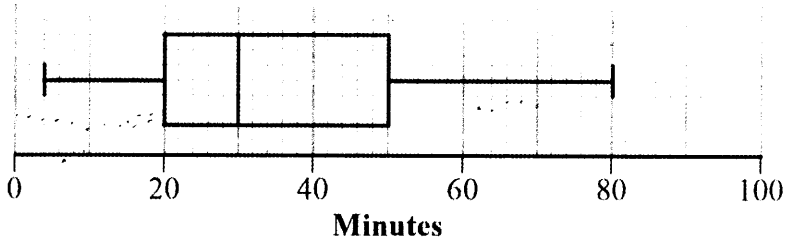

3.1 Using the box and whisker diagram determine:

3.1.1 the median for the data. (1)

3.1.2 what percentage of these students do more than 50 minutes of homework each day. (2)

3.2 Calculate:

3.2.1 the range for the data. (2)

3.2.2 the interquartile range for the data. (2)

[7]

Copyright Reserved

QUESTION 4

The frequency table and histogram below provide information from a survey about the distances travelled by some teachers on a daily basis.

Use the information provided to answer the questions which follow.

Distance (x km)	**Frequency**
$0 < x \leq 10$	15
$10 < x \leq 20$	a
$20 < x \leq 30$	b
$30 < x \leq 40$	10
$40 < x \leq 50$	10

Histogram showing distance travelled by a selection of teachers on a daily basis

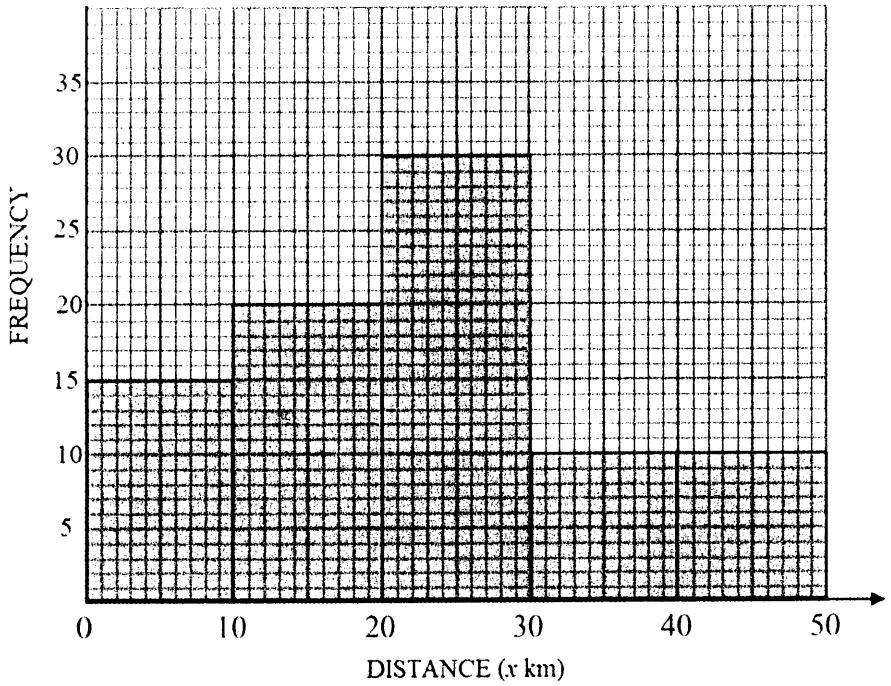

4.1 Is the above given data discrete or continuous? (1)

4.2 Determine the values of a and b from the frequency table. (2)

4.2 How many teachers participated in the survey? (1)

4.3 Identify the modal class for the data. (1)

4.4 Calculate an estimate the mean of the data. (3)

4.5 Calculate an estimate of the median daily distance travelled. (1)

[9]

QUESTION 5

5.1 The diagram below shows a spotlight at point B, mounted 12 metres directly above a point C at the front edge of a field.

The spotlight swings 44,3° from the vertical to illuminate another point D, the midpoint of AC.

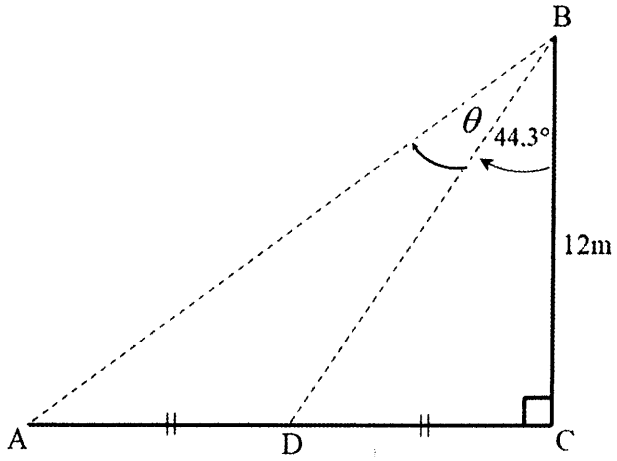

5.1.1 Calculate the length of DC. (3)

5.1.2 Calculate through how many more degrees the spotlight must swing in order to illuminate point A (i.e. calculate θ) (3)

5.2 The diagram below represents a pyramid with a square base of side 12 cm. The diagonals QS and TR meet at M. N is vertically above M and $NR = 9$ cm.

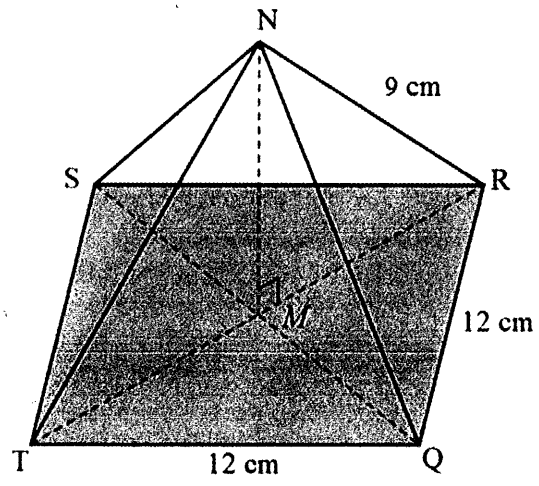

5.2.1 Calculate the length of TR. (Leave your answer in surd form.) (3)

5.2.2 Calculate the length of MN, the perpendicular height of the pyramid. (2)

5.2.3 Calculate the size of $N\hat{T}R$. (3)

[14]

Copyright Reserved

QUESTION 6

6.1 The diagram below shows a sphere, with a diameter of 30cm, placed inside an empty cylindrical tank of radius 45cm and height 80cm. The cylinder is then filled with water.

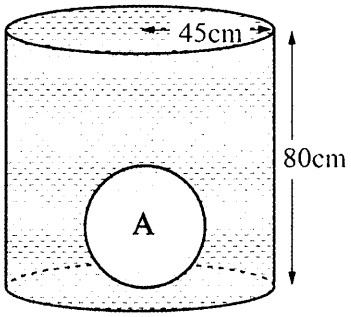

Volume of sphere $=\frac{4}{3}\pi r^3$
Volume of cone $=\frac{1}{3}\pi r^2 h$
Volume of a cylinder $=\pi r^2 h$

6.1.1 Calculate the volume of the metal sphere, indicated in the diagram as A. (2)

6.1.2 Calculate the volume of water required to fill the tank. (3)

6.1.3 The sphere is removed from the tank as seen in the diagram below.

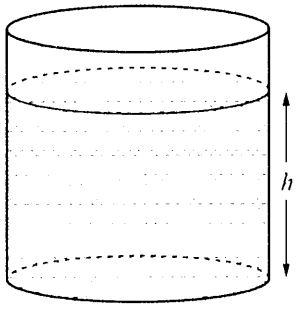

Calculate h, the height of the water remaining in the tank. (3)

6.2 The sphere is then melted down and the metal is made into a solid cone of height 25cm. Calculate the radius of the cone. (2)

[10]

TOTAL: 75

Copyright Reserved

GRADES 10 + 11 MATH + MLIT.

education

Department:
Education
PROVINCE OF KWAZULU-NATAL

NATIONAL
SENIOR CERTIFICATE

GRADE 10

MATHEMATICS

COMMON TEST

SEPTEMBER 2019

MARKING GUIDELINE

MARKS: 75

TIME: 1½ hours

This marking guideline consists of 6 pages.

Copyright reserved

QUESTION 1

1.1.1	Deposit = $= \frac{12}{100} \times R4\,999$ $= \mathbf{R599,98}$	(2)
1.1.2	Monthly instalment $= \frac{R6\,598,68}{24}$ $= \mathbf{R\,274,95}$	(1)
1.1.3	Total paid = R 599,98 + R 6 598,68 $= \mathbf{R\,7\,198,66}$	(2)
1.1.4	$A =$ R6598,68 $P =$ R4399,00 $n =$ 2 years $i =$? $A = P(1+i\times n)$ $i = \frac{\frac{A}{P}-1}{n}$ $i = \frac{\frac{6598,68}{4399}-1}{2}$ $i = 0,25$ $\therefore$ **interest rate = 25%**	(3)
1.2	United States $1 = R14,75 $\therefore$ $0,85 = R12,54 United Kingdom £1 = R18,77 $\therefore$ £1,30 = R24,40 Petrol would be cheapest in the **United States**.	(3)
1.3	$A =$ R85000 $P =$? $n =$ 8 years $i =$ 14% $A = P(1+i)^n$ $P = \frac{A}{(1+i)^n}$ $P = \frac{85000}{(1+0,14)^8}$ **P = R 29 797,52**	(3)

Copyright Reserved

1.4	$A=$? $P=$ 2560000 $n=$ 2 years $i=$ 5,25% $A=P(1+i)^n$ $A=2560000\left(1+\frac{5,25}{100}\right)^2$ $A=2835856$	(3)
		[17]

QUESTION 2

2.1.1	$P(\text{pink})=0$	(1)
2.1.2	$P(\text{blue})=\frac{5}{20}=\frac{1}{4}$ OR 25% OR 0,25	(1)
2.1.3	$P(\text{numbered 3})=\frac{4}{20}=\frac{1}{5}$ OR 20% OR 0,2	(1)
2.2.1	P(A and B) = 0	(1)
2.2.2	Let P(A and B) = x 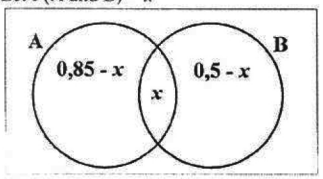 $(0,85-x)+(x)+(0,5-x)=1$ $1,35-x=1$ $-x=-0,35$ $x=0,35$ Therefore **P(A and B) = 0,35**	(4)
2.3.1	P(A or B)	(1)
2.3.2	P(A')	(1)
2.3.3	P(A and B)'	(1)
2.3.4	P(A and B)	(1)

2.4.1	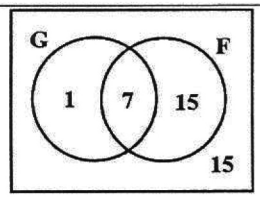 	(3)
2.4.2	15 learners	(1)
2.4.3 (a)	P(German only) = $\frac{1}{38}=0,0263=2,63\%$	(1)
2.4.3 (b)	P(did NOT study French) = $\frac{16}{38}=\frac{8}{19}=0,42=42\%$	(1)
		[18]

QUESTION 3

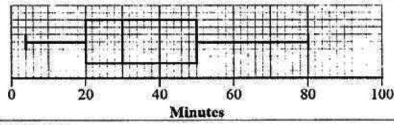

3.1.1	30 minutes	(1)
3.1.2	25%	(2)
3.2.1	Range = 80 – 4 = 76 minutes	(2)
3.2.2	IQR = 50 – 20 = 30 minutes	(2)
		[7]

QUESTION 4

4.1	Continuous	(1)
4.2	$a=20$ $b=30$	(2)
4.2	85 teachers	(1)
4.3	$20 < x \leq 30$	(1)
4.4	Estimated mean $=\frac{(15\times5)+(20\times15)+(30\times25)+(10\times35)+(10\times45)}{85}$ = **22,65**	(3)
4.5	Estimated median = **25km**	(1)
		[9]

QUESTION 5

5.1.1	$\tan 44,3° = \frac{DC}{12m}$ $DC = 12\tan 44,3°$ $DC = 11,71m$	✓tan ratio ✓ simplification ✓A (3)
5.1.2	$AC = 2 \times DC = 23,42m$ $\tan A\hat{B}C = \frac{23,42}{12}$ $A\hat{B}C = 62,87°$ $\therefore \theta = 62,87° - 44,3° = 18,57°$ *therefore spotlight will need to swing* 18,57° *further*	✓CA based on DC (5.1.1) ✓CA value for $A\hat{B}C$ ✓CA ($A\hat{B}C - 44,3°$) (3)
5.2.1	$TR^2 = TQ^2 + QR^2$ (*pythagoras*) $TR = \sqrt{12^2 + 12^2}$ $\boldsymbol{TR = 12\sqrt{2}\,cm}$	(3)
5.2.2	$NM^{\ 2} = NR^2 - MR^2$ (*pythagoras*) $NM = \sqrt{9^2 - \left(6\sqrt{2}\right)^2}$ $\boldsymbol{NM = 3\,cm}$	(2)
5.2.3	$\tan N\hat{T}R = \frac{3}{6\sqrt{2}}$ $\boldsymbol{N\hat{T}R = 19,47°}$	(3)
		[14]

QUESTION 6

6.1.1	Volume of sphere $= \frac{4}{3}\pi r^3$ $= \frac{4}{3}\pi(15)^3$ $= \mathbf{14137,17\,cm^3}$	(2)
6.1.2	Volume of water $= V_{cylinder} - V_{sphere}$ $= \pi r^2 h - \frac{4}{3}\pi r^3$ $= \pi(45)^2(80) - 14137,17$ $= \mathbf{498\,800,84\,cm^3}$	(3)

6.1.3	$h = \frac{\text{Volume of } water}{\pi r^2}$ $h = \frac{498800,84}{\pi(45)^2}$ $\boldsymbol{h = 78,41\,cm}$	(3)
6.2	$V = \frac{1}{3}\pi r^2 h$ $r = \sqrt{\frac{3V}{\pi h}}$ $r = \sqrt{\frac{3(14137,17)}{\pi(25)}}$ $\boldsymbol{r = 23,24\,cm}$	(2)
		[10]

TOTAL: 75